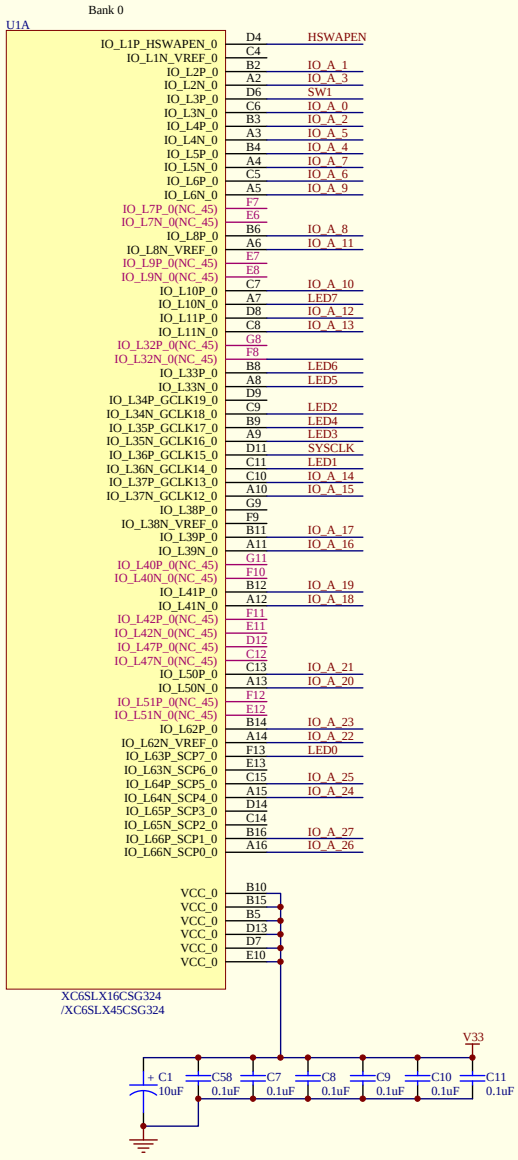


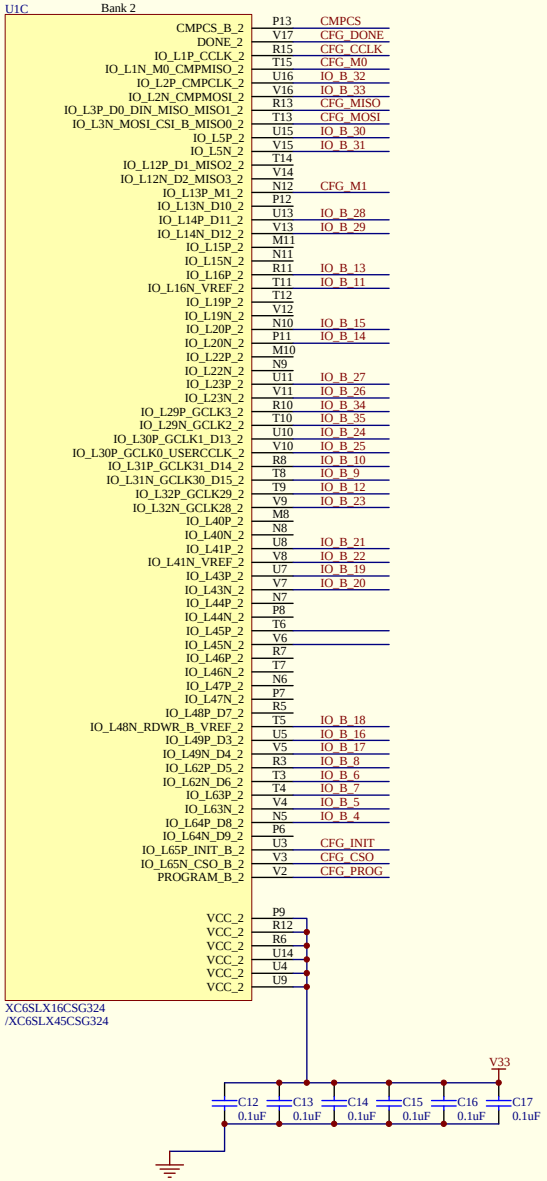


If short J3, 3.3V power is supplied from CN2_2 pin.

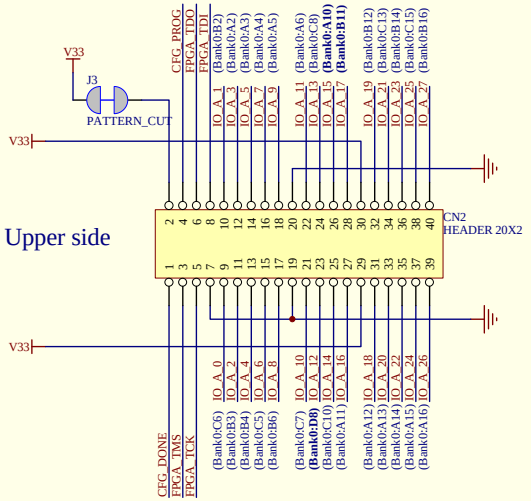


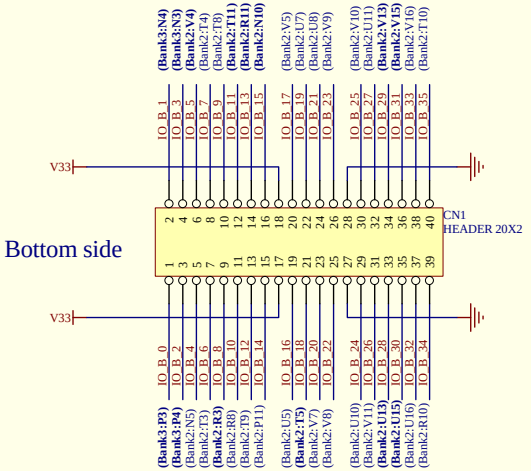


TOKUDEN Spartan-6 Evaluation board

(C)Copyright 2009-2010 TokushuDenshiKairo Inc.

| | | |
|---|---|---|
| Title | FPGA (GPIO pin headder) | |
| Size: A3 | Number: NP1027A | Revision: 2.1 |
| Date: 10-Aug-2010 | Sheet of 1/6 | |
| File: C:\naitou\np1027\NP1027A.SchDoc | Drawn By: R.Naitou | |

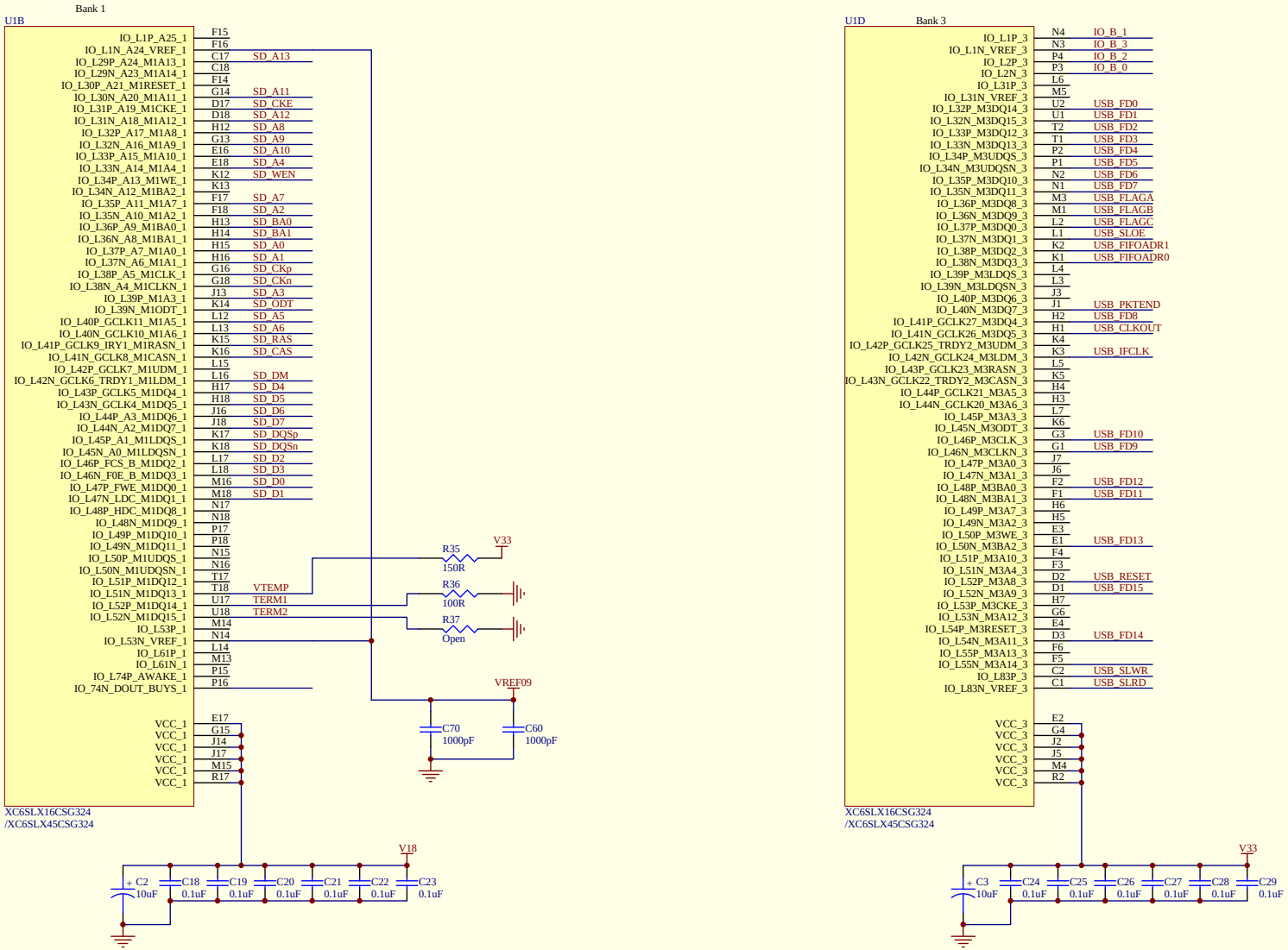


TOKUDEN Spartan-6 Evaluation board

(C)Copyright 2009-2010 TokushuDenshiKairo Inc.

| | | |
|---|---|---|
| Title | FPGA (USB and DDR2 SDRAM) | |
| Size: A3 | Number: NP1027A | Revision: 2.1 |
| Date: 10-Aug-2010 | Sheet of 2/6 | |
| File: C:\naitou\np1027\NP1027A[ÝÇÉvÍ[—\np1027a.sch | | R.Naitou |

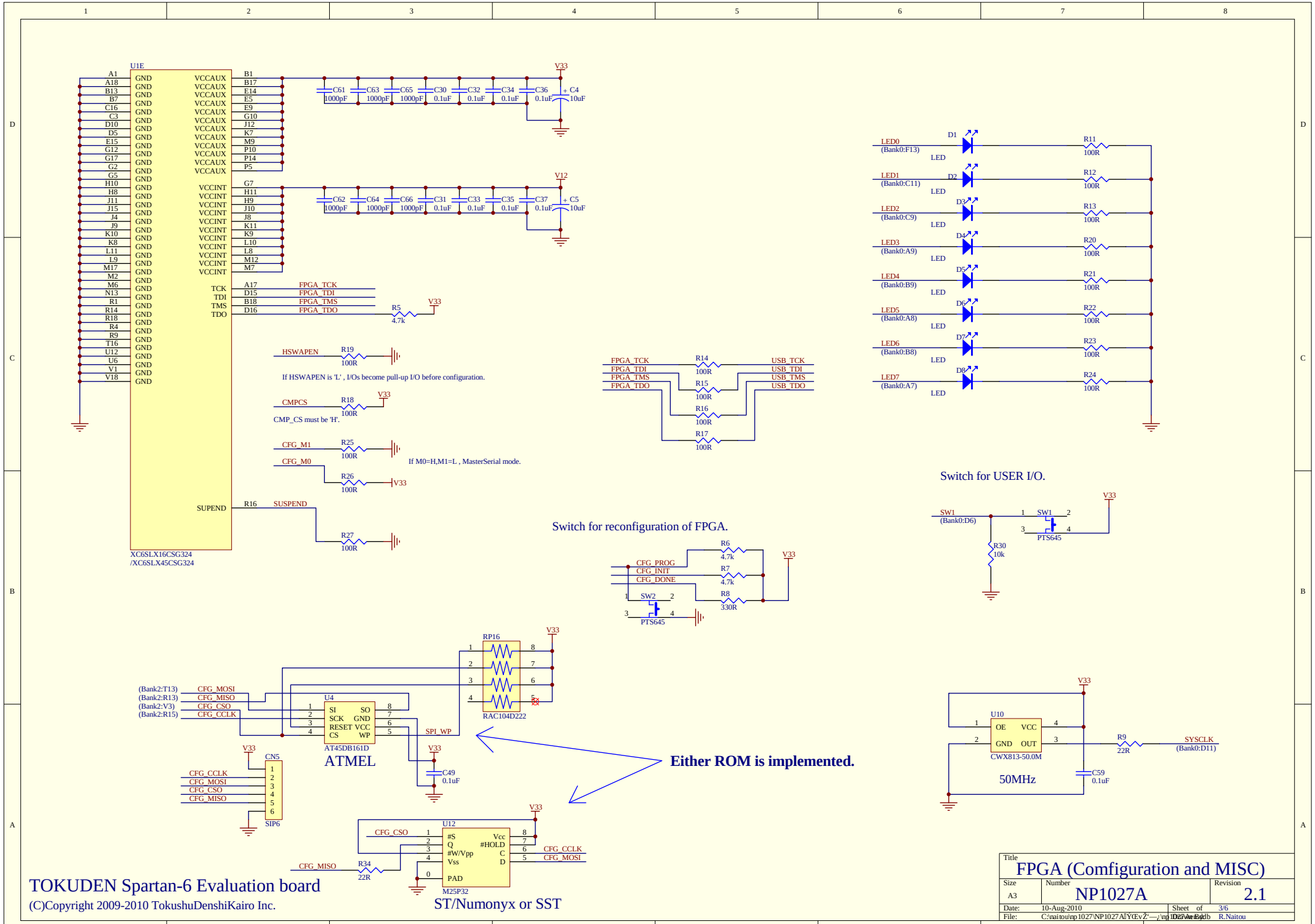
U1E
XC6SLX16CSG324
/XC6SLX45CSG324
V33
V12
C61 1000pF
C63 1000pF
C65 1000pF
C30 0.1uF
C32 0.1uF
C34 0.1uF
C36 0.1uF
C4 10uF
C62 1000pF
C64 1000pF
C66 1000pF
C31 0.1uF
C33 0.1uF
C35 0.1uF
C37 0.1uF
C5 10uF
FPGA_TCK
FPGA_TDI
FPGA_TMS
FPGA_TDO
R5 4.7k
HSWAPEN
R19 100R
If HSWAPEN is 'L' , I/Os become pull-up I/O before configuration.
CMPCS
R18 100R
CMP_CS must be 'H'.
CFG_M1
R25 100R
CFG_M0
R26 100R
If M0=H,M1=L , MasterSerial mode.
SUSPEND
R16
R27 100R
USB_TCK
USB_TDI
USB_TMS
USB_TDO
R14 100R
R15 100R
R16 100R
R17 100R
LED0 (Bank0:F13)
LED1 (Bank0:C11)
LED2 (Bank0:C9)
LED3 (Bank0:A9)
LED4 (Bank0:B9)
LED5 (Bank0:A8)
LED6 (Bank0:B8)
LED7 (Bank0:A7)
D1
D2
D3
D4
D5
D6
D7
D8
LED
R11 100R
R12 100R
R13 100R
R20 100R
R21 100R
R22 100R
R23 100R
R24 100R
Switch for USER I/O.
SW1 (Bank0:D6)
SW1
PTS645
R30 10k
Switch for reconfiguration of FPGA.
CFG_PROG
CFG_INIT
CFG_DONE
R6 4.7k
R7 4.7k
R8 330R
SW2
PTS645
RP16
RAC104D222
(Bank2:T13) CFG_MOSI
(Bank2:R13) CFG_MISO
(Bank2:V3) CFG_CSO
(Bank2:R15) CFG_CCLK
U4
SI SO
SCK GND
RESET VCC
CS WP
AT45DB161D
ATMEL
SPI_WP
C49 0.1uF
CN5
SIP6
Either ROM is implemented.
U12
#S Vcc
Q #HOLD
#W/Vpp C
Vss D
PAD
M25P32
ST/Numonyx or SST
R34 22R
U10
OE VCC
GND OUT
CWX813-50.0M
50MHz
R9 22R
SYSCLK (Bank0:D11)
C59 0.1uF
TOKUDEN Spartan-6 Evaluation board
(C)Copyright 2009-2010 TokushuDenshiKairo Inc.
Title
FPGA (Comfiguration and MISC)
Size A3
Number NP1027A
Revision 2.1
Date: 10-Aug-2010
Sheet of 3/6
File: C:\naitou\np1027\NP1027A.YŒvŽ'—¿\np1027ver.pdb
Drawn by R.Naitou